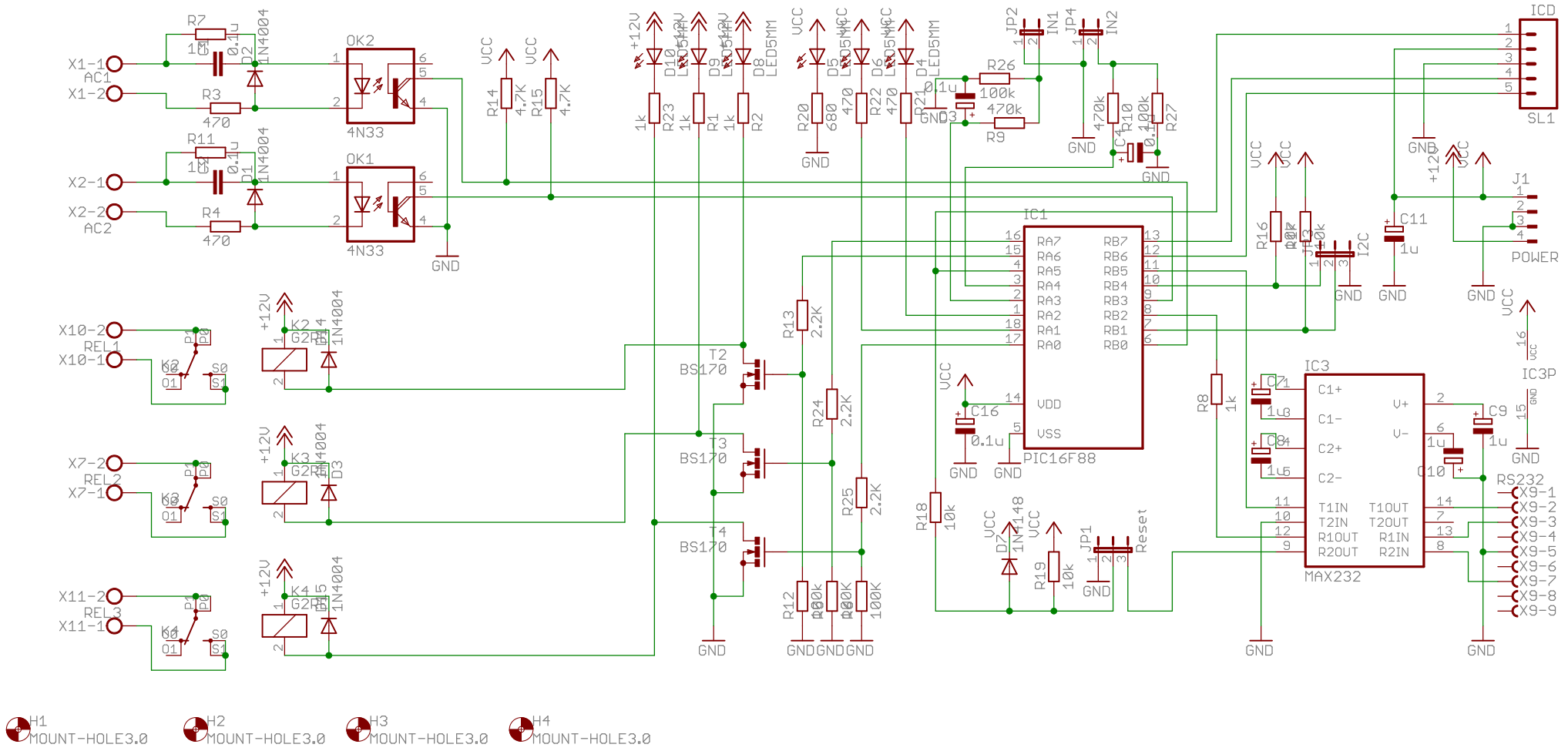

X1-1
AC1
X1-2
X2-1
X2-2
AC2
R7
R3
R11
R4
D2
D1
1N4004
OK2
OK1
4N33
GND
VCC
R14
R15
4.7K
+12V
D10
D9
D8
LED5MM
D5
D6
D4
R23
R1
R2
R20
R22
R21
R26
R9
R10
R27
JP2
JP4
IN1
IN2
C4
ICD
SL1
J1
POWER
IC1
PIC16F88
RA7
RA6
RA5
RA4
RA3
RA2
RA1
RA0
RB7
RB6
RB5
RB4
RB3
RB2
RB1
RB0
VDD
VSS
C16
0.1u
R16
R17
R18
R19
R8
IC3
MAX232
C1+
C1-
C2+
C2-
V+
V-
T1IN
T2IN
R1OUT
R2OUT
T1OUT
T2OUT
R1IN
R2IN
C9
C10
C11
1u
IC3P
RS232
X9-1
X9-2
X9-3
X9-4
X9-5
X9-6
X9-7
X9-8
X9-9
X10-2
REL1
X10-1
X7-2
REL2
X7-1
X11-2
REL3
X11-1
K2
K3
K4
G2R
D14
D3
D15
T2
T3
T4
BS170
R13
R24
R25
R12
R18
R19
D7
1N4148
JP1
Reset
H1
MOUNT-HOLE3.0
H2
MOUNT-HOLE3.0
H3
MOUNT-HOLE3.0
H4
MOUNT-HOLE3.0